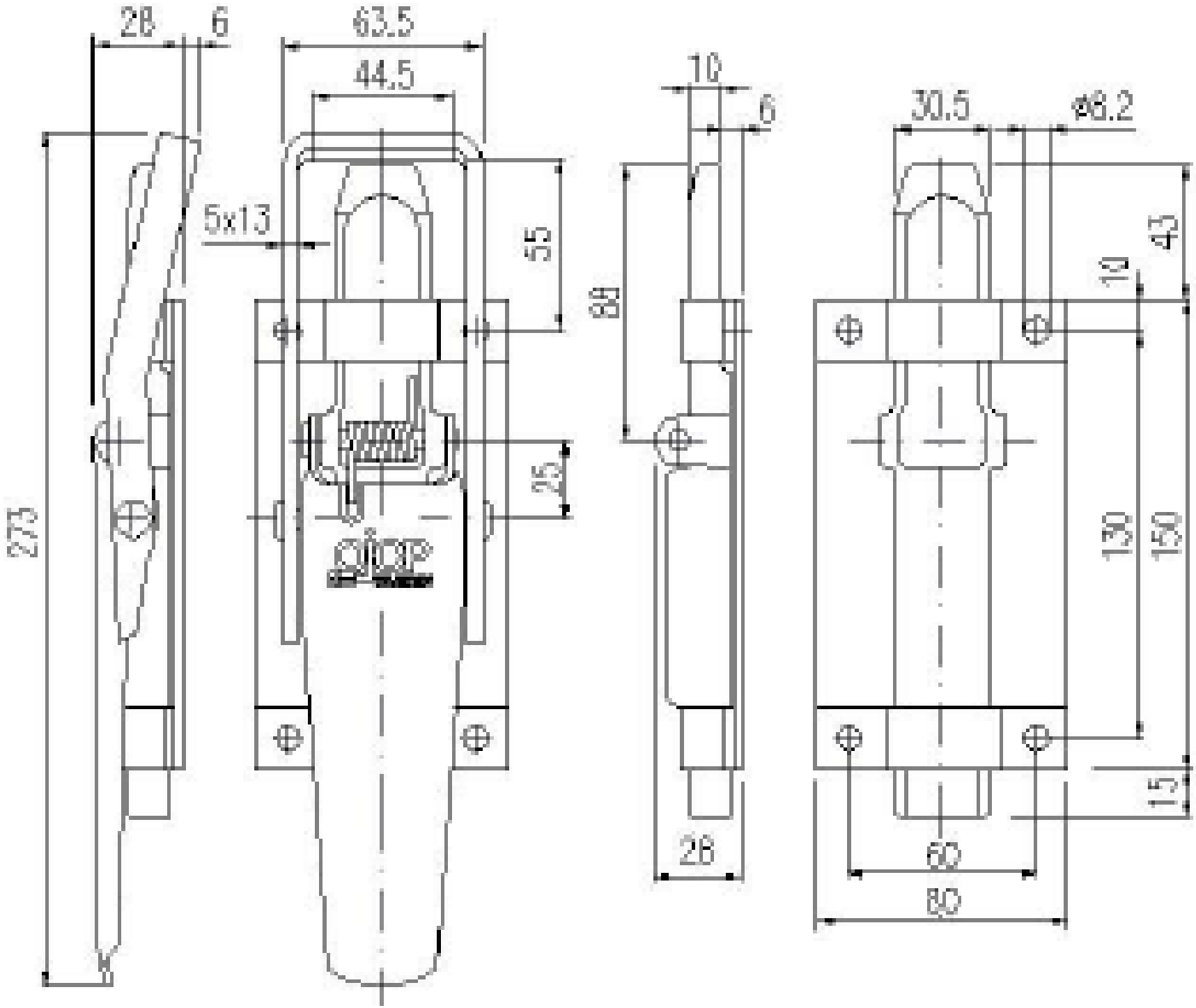
28
6
63.5
44.5
5x13
55
25
273
10
6
88
28
30.5
ø8.2
43
10
130
150
15
60
80